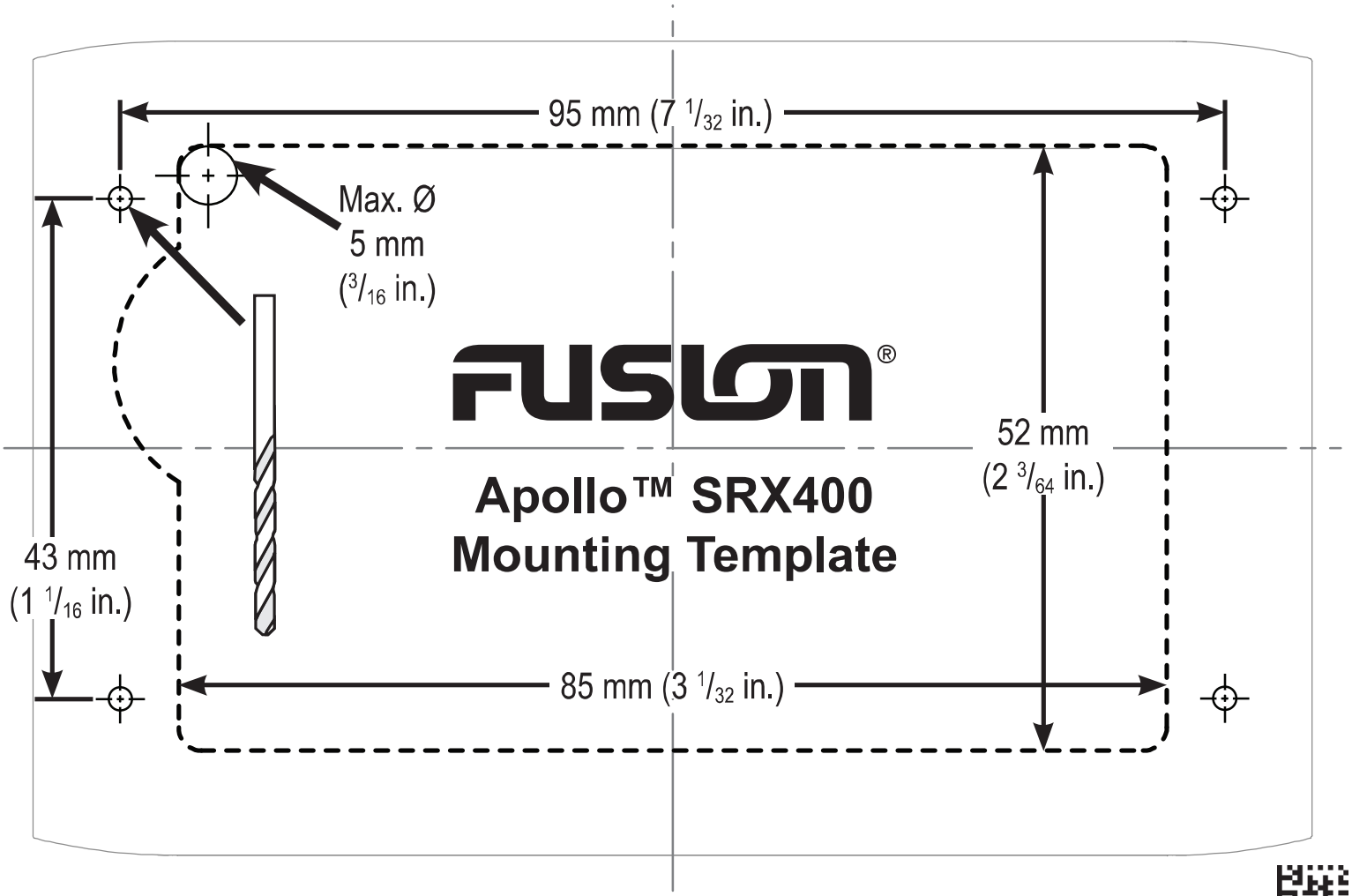

April 2018 © 2018 Garmin Ltd. or its subsidiaries Printed in Taiwan 190-02391-04_0A

SRX400_template.indd 1 4/25/2018 2:02:00 PM